1530

direction for use

All or partial copy, reproduction and translation instructions for the use of the sewing machine must be agreed by our prior and the source.

Anhui Jieyu Shoe Machinery Technology Co., LTD

Address: Jinan Industrial Park, Economic and Technological Development Zone, Chizhou City, Anhui Province

Tel.: 0566-2417799

catalogue

1. Safety....1
1.01 Specification....1
1.02 General safety instructions....1
1.03 Pay attention to the safety icon....3
1.04 Special precautions in the work....3
1.05 Operators and professionals....4
1.05.01 Operators....4
1.05.02 Professional personnel....4
1.06 Hazard warning....5

2 Apply the provisions....6

3. Technical data....7
3.01 Basic parameters....7
3.02 pins and thread....8
3.03 Optional styles and sub-models....8

4. Disposal of scrapped machines....9

5 Transportation, packaging, and inventory....10
5.01 Transportation to the customer plant area....10
5.02 Transportation in the customers factory area....10
5.03 Handling of packaging materials....10
5.04 Inventory....10

6 Icon description....11

7 Operating elements....12
7.01 Main switch....12
7.02 Key on the nose....12
7.03, needle pendulum knob....12
7.04, pin pitch knob....13
7.05 Lift the foot....13
7.06, press foot pressure....14
7.07 Pedal....14
7.08, with a flip wrench....14
7.09, and the control panel....15
7.09.01, key display and description....15
7.09.02 Auxiliary features....16
7.09.03 Restore the factory settings....16
7.09.04, stop pin position quick setting....17
7.09.05 Error code table....17
Port schematic diagram of 7.09.06....17

8 Installation and commissioning....18
8.01 Installation....18
8.01.01 The height adjustment of the set plate....18

catalogue

8.01.02 Sewing machine installation....19
8.01.02.01 Installation of oil pan assembly....19
8.01.02.02 Head installation....19
8.01.02.03 Installation of random accessories....20

8.02 First test run 24
8.03 Start / close of the machine 24

9 Machine preparation 25
9.01 Needle loading 25
9.02 Through the line and line tension 25
9.03 Around the bottom line; pre-adjust the bottom line tension 27
9.04Remove / load spindle shell 28
9.05The tension of the spindle thread / adjusting the bottom line 28
9.06, pick line spring 30
9.07 Machine and spindle adjustment 30
9.08 Tangent component adjustment 26
9.08.01 Tangent the cam position adjustment 26
9.08.02, wire-shear electromagnet adjustment 26
9.08.03, buffer limit block adjustment 27

10 Maintenance and maintenance 33
10.01 Cleaning 28
10.02, refueling the shuttle 29
10.03 Check the oil level 29
10.05 Bevel gear gear lubrication 35

11 vulnerable parts 36

1 is for security

1.01 Specification

This machine is manufactured in accordance with the European specifications given in the conformity and manufacturers statement.

As a supplement to the instructions, please pay attention to the relevant effective and other laws and regulations including the country where the machine is operated, as well as the effective environmental regulations! We should always pay attention to the provisions of the local trade industrial accident federation, or the provisions of other supervisory institutions!

1.02 General safety instructions

●The machine can only be operated by trained operators after reading the instructions!

●Before the test commissioning, we must first read the

safety tips and instructions of the motor manufacturer!

Please note the hazard warnings and safety tips on the

machine!●

●It is only allowed to operate the machine according to the provisions of the machine, and shall not make the machine run without the subordinate protection device, while paying attention to the relevant safety regulations.

●In changing sewing tools (e. g. pins, press, pin board, and thread shuttle), threading, leaving the working position, and on the machine For maintenance, operate the main switch or pull down the

power plug to cut off the power of the machine! Daily

maintenance work can only be completed by the corresponding

trained personnel!●

●Repair work and special maintenance work are only allowed to be

complete by professionals and corresponding trained personnel!

Work on the electrical equipment is only allowed to have the

corresponding qualified personnel to complete! ●

●Not allowed to work on live

parts and equipment! Special

circumstances according to the

EN50110 regulations.●

●All machine modifications and modifications are only permitted under the appropriate safety requirements!

●Only our allowed spare parts are allowed in the repair work! It is clear that all is not done by us

The spare parts and accessories supplied have not been inspected by us and are not approved by us. The ading and or use of these products may negatively change the design characteristics of the machine under certain circumstances. We shall not be responsible for any loss caused by the use of non-original parts.

1.03 Pay attention to the safety icon



Dangerous position!
Pay special attention!



At risk of injury to the operators or professionals!



pay attention to

Not allowed to work without a finger guard and protective device!

Before threading, changing shuttle

1.04 Special precautions in the work

●The IFU is part of the machine and therefore must be available to operators at any time. The instructions must be read before the first commissioning.

●Operators and professionals must be trained on the protection devices and safety work methods of the machine. It is the responsibility of the machine operator to ensure that the machine operates in a normal fault-free condition.●

●The machine operator must take care not to remove any safety devices and fail them. The machine operator must note that only authorized persons are allowed to work on the machine.●

Other inquiries can be answered from the responsible sales office.

1.05 Operators and professionals

1.05.01 Operators

Operators are those responsible for the machine preparation, operation and cleaning of the machine and troubleshooting the sewing range. The operator has the responsibility to observe and observe the following:

● Note the safety tips listed in the instructions for all work! Do not use any working method that affects the safety production of machines! Wear close clothing, no jewelry, such as necklaces and rings!●

●

●It must be guaranteed that only the authorized personnel will stay in the danger zone of the machine!

●On the machine, report immediately to the machine operator!

1.05.02 Professional personnel

Professionals refer to those who are professionally trained in electrical / electronics and machinery. They are responsible for the lubrication, maintenance, repair and calibration of the machine.

The professional has the responsibility to observe and observe the following:

●Note the safety tips listed in the instructions for use during all work!

●The master switch must be closed before the check and repair work begins and ensure accidental start of the machine!

●Do not work on live parts and equipment! Special cases shall be handled according to the EN 50110 regulations. After the repair and maintenance work is completed, the protective cover must be covered again!●

1.06, Hazard Warning

During the operation of the machine, the free working range of 1 meter must be kept in the front

During the sewing process, do not grab anything in the sewing needle area!

In the process of adjustment, do not put any items on the workbench!

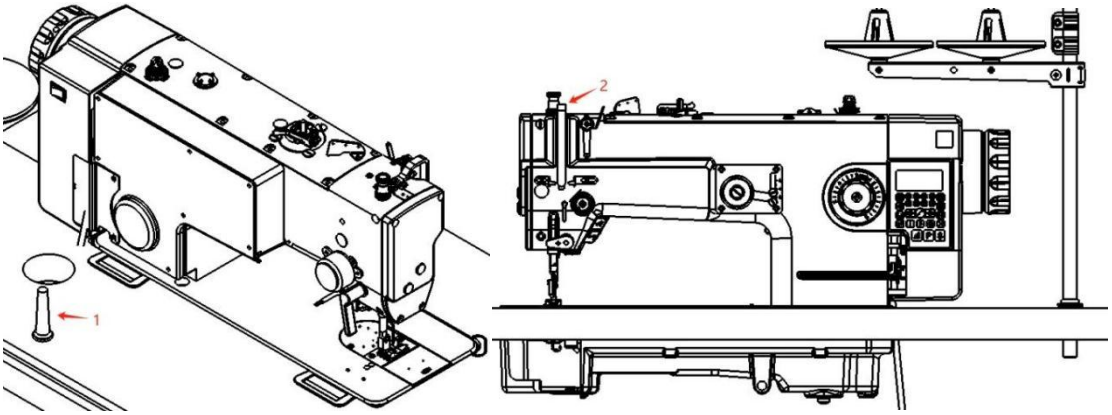

A machine without bracket 1 is not allowed! A heavy nose is dangerous, and the machine may overturn when tilted backwards.

Do not start the machine without the rod cover 2! There is a risk of injury by the movement of the lever

2 Apply the provisions

TTY-1530 BFT-CQ is a needle rod can swing left to right, sewing thread has straight line, Z shape thread, support automatic lifting foot, automatic cutting, automatic line is a special sewing machine, tortuous sewing machine.

The machine is used to complete lockline sewing in leather goods and decorative industries.



Any application not permitted by the machine manufacturer is considered to be a violation! Due to the violation of the regulations

The machine manufacturer shall not be responsible for the loss caused by the application! What belongs to the application regulations is also included

Observe the various operation methods, maintenance measures, calibration methods and repair measures given by the machine manufacturer!

3. Technical data

3.01 Basic parameters

Wire type: .....301 (Lock trace)
Pass the maximum height underfoot: .....10 mm
Space width: .....260 mm
Space height:..... 100 mm
Size of the nose
Long,..... Roughly 590 mm
Wide,..... Roughly 190 mm
High (above board)..... Roughly 260 mm
Table size..... 1200 x550 mm
Max speed
Factory speed..... At 2,200 rpm
Max speed ..... 2500 rpm
Maximum needle distance:..... 4 mm
Maximum needle pendulum:..... 8 mm

Wiring data:
Working voltage:..... 220 V±10%,50/60 Hz
Rated power:..... 0.75 k w

Noise data:

Noise standards at the workplace at the right speed
(Noise measurement as per DIN 45 635-48-A-1, ISO 11204, ISO 3744, ISO 4871)

Type TTY1530BFT at a speed of 2200 rpm..... L pA=82 dB(A).

Machine net weight:..... Roughly, 3 7.5 kg
Machine gross weight:..... Roughly 4 4 kg

3.02 pins and thread

Needle: TNC / DP * 5 * 14 #, 16 #, 18 #, 20 # and 21 # (the position of spindle hook should be adjusted when changing needles of different specifications)
Line: 60 # -, 40 #, 30 #, 20 #

▲ Or use other types of lines with the same strength

3.03 Optional styles and sub-models

The TTY-1530 BFT-CQ is suitable for sewing medium-thickness materials

4. Disposal of scrapped machines

●The user is responsible for disposing of the scrapped machines in accordance with the relevant regulations.

●The materials used in the machine are: steel, aluminum, brass and various plastics. The electrical equipment consists of plastic and copper.

●Machines should be handled in accordance with effective local environmental regulations, and may be handled with the help of a specialized company.



In particular, the parts with lubricant should be specially treated in accordance with the effective local environmental regulations!

5 Transportation, packaging, and inventory

5.01 Transportation to the customer plant area

All the machines are packaged and supplied.

5.02 Transportation in the customers factory area

The machine manufacturer shall not be responsible for the transportation of the machine in the customers factory area or to the specific application site. Special attention should be paid to transport the machine upright transport.

5.03 Handling of packaging materials

The packaging materials of the machine are paper, carton, and VCE fiber mesh. The user is responsible for handling the packaging of the machine according to the relevant regulations.

5.04 Inventory

When unused, the machine can be stored for 6 months. The machine shall be protected from dust and moisture. When the machine is stored for a long time, all parts, especially the sliding surface, should be protected against anti-corrosion, such as oil film.

6 Icon description

In this instruction, the work and important information are expressed by the corresponding icon. The icons used have

The following meanings:

	Tip, information
	Clean, maintain
	lubricating
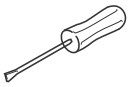	Maintenance, repair, calibration, and repair (Work done only by professionals)

7 Operating elements

7.01 Main switch

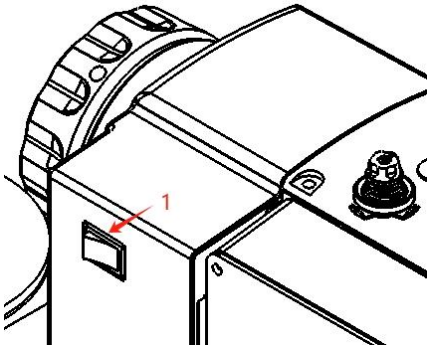

●Machine on and off by dialing the power switch 1.

7.02 Key on the nose

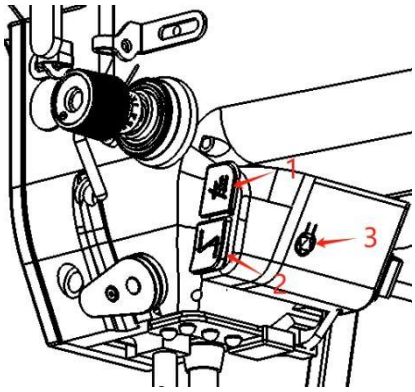

●Press button 1 and sew a stitch.

●Key 2 Back seam button, hold down the entry back seam.

●Press the 3 LED light switch with three brightness levels.

7.03 pin pendulum knob

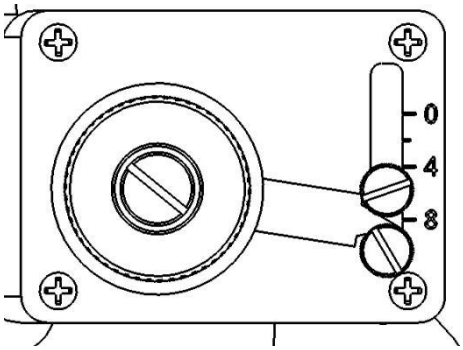

- Turn the swing needle knob to achieve the (0-8mm) needle swing adjustment

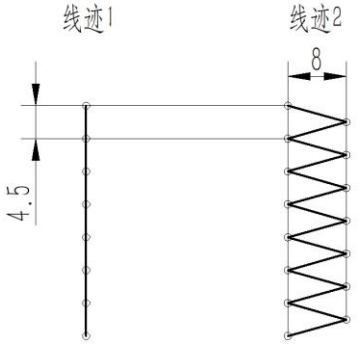

- Track 1, seam straight, needle pendulum keep zero, needle distance range 0-4.5mm.
- Track 2, Z word seam, needle pendulum range 0-8mm, needle distance range 0-4.5mm.

7.04 pin knob

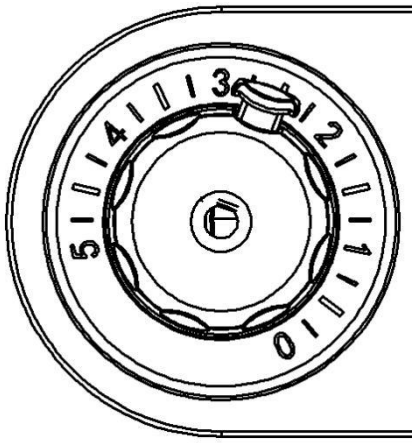

- Turn the pitch knob to achieve the (0-4mm) pitch adjustment

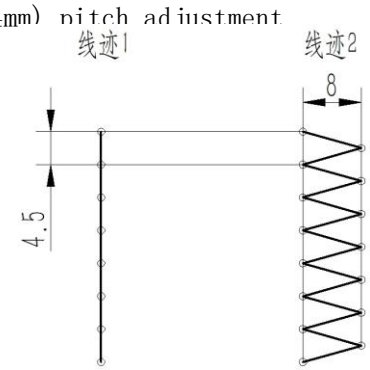

- Track 1, seam straight, needle pendulum keep zero, needle distance range 0-4.5mm.
- Track 2, Z word seam, needle pendulum range 0-8mm, needle distance range 0-4.5mm.

7.05 Lift the foot

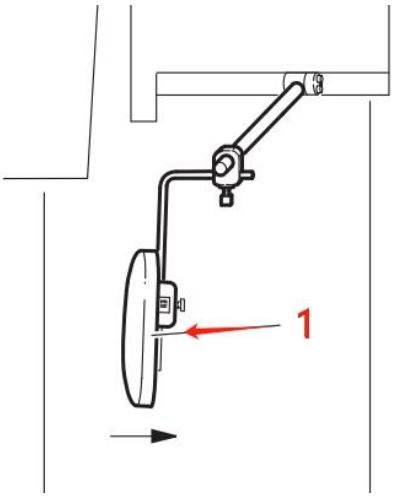

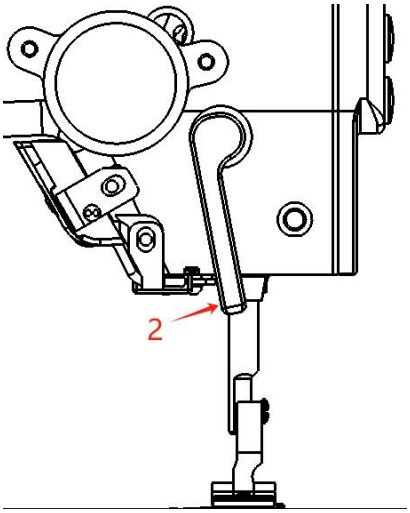

- Knee control foot lift pressure (0-10mm).
- Lift the foot (0-6mm).

7.06, press foot pressure

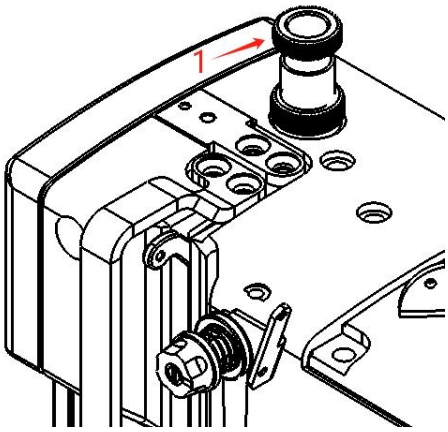

- According to the thickness of the seam fabric, rotate the pressure regulating nut and adjust the foot pressure to the appropriate size.

7.07 Pedal

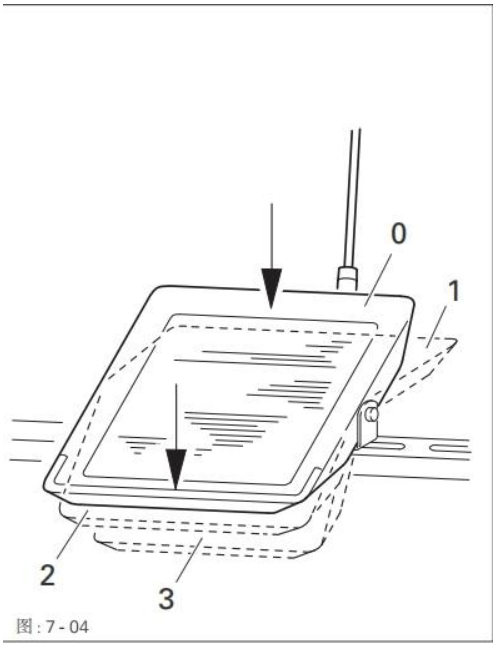

0 = the still position

1 = sewing

2 = lift the roller to press the foot

3 = Cut the line and lift the roller to press the foot

7.08, with a flip wrench

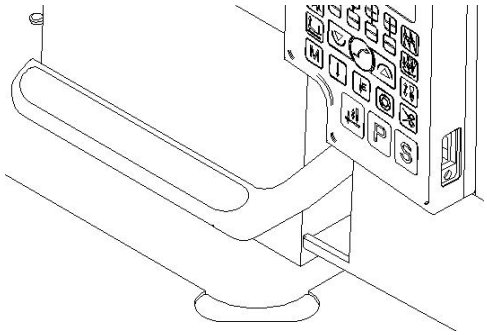

- Press the flip wrench, the sewing machine immediately becomes inverted, can be inverted, the hand open, it is sent.

7.09 Control Panel

The control panel is used to display and call the machine function settings and sewing operations, to input parameter values, and to read error messages and service settings.

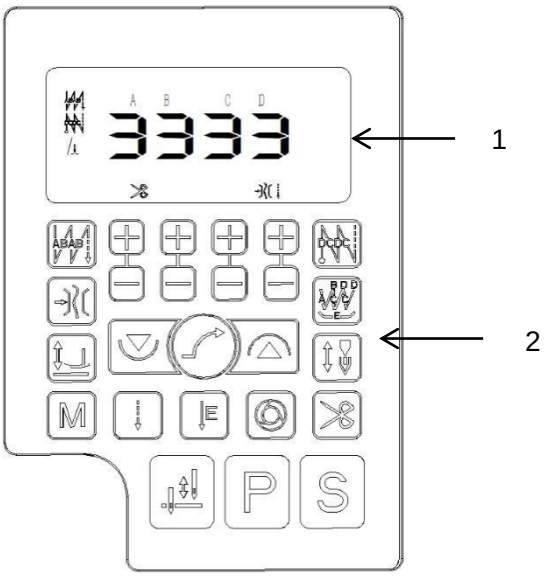

The control panel has the following control and display units.

- Display 1 for displaying relevant information and selecting to set relevant parameters.
- Function button 2 for opening or closing the corresponding function and related parameter adjustment

7.09.01 Key display and description

name	key	make a footnote
Start the seam key	ABAB	If clicked, switch the starting joint B, the starting seam (section A and B) once, or the starting seam (section A and B) twice.
Terminate the counterseam key	DCDC	If click, switch section C, terminate the seam (section C and D) once, and terminate the seam (section C and D) twice.
Continuous counterstitch key	B D D A C C E	If click, set to switch to continuous return mode.
Free seam key		If click, set to free slit mode.
A fixed needle seam key	E	If click, set the switch to E segment pin seam mode.
Multi-section fixed needle seam key	M	If you click, switch the four, seven, eight and 15 seam modes.

Automatic trigger key		(Effective only in the pin seam) when the trigger function is on. Trigger the foot pedal and automatically walk through the set sewing process.
tangent key		If click, set the use or cancel the tangent function.
Clip key		If click, set the use or unclip function.
Lift the foot button		1. When the icon is bright, the pressure foot will be lifted automatically after cutting the line. 2. When the icon is on, the foot automatically when the motor in the seam stops. 3. When the two ICONS are on, the pressure foot will be automatically lifted after cutting the line and when the motor stops in the seam of the car. 4. When the 2 icon is not bright, there is no automatic lifting foot function.
Stop needle position key		If click, switch the stop position of the needle (stop position / stop position).
Slow start crack key		If click, set the use or cancel the slow opening function.
Fill the needle key		When the seam stops, if click, make the needle or the forward needle.
Function parameter edit key	P	Enter or exit function parameters.
Parameter View save key	S	View and save the contents of the selected parameter number: after selecting the parameter number, press this key to view and modify it. After modifying the parameter value, press this key to exit and save the parameters.
Parameter increment key	+	Increase the parameter
Parameter decreasing key	—	Reduce parameters
Accelerator Key		Improve the speed of operation
Slow down key		Reduce running speed

7.09.02 Auxiliary features

7.09.03 Restore the factory settings

In the boot state, long press the automatic trigger button, restart to restore the factory setting.

7.09.04 Stop pin position setting

First Steps



- Under shutdown, open the power button and enter the advanced parameters, as shown in the interface on the left (enter P-92 by default)

the second step



- Through the "+ and-" button, adjust the parameters to "P-72", as shown in the interface in the left picture

the third step



- Press "S" key to enter the upper stop position to adjust and turn the hand wheel, and the displayed value will change with the position of the wheel. (after the foot is lifted, the tip is flat at the bottom of the foot) Press "S" key to save the current position (value) for the upper stop position as shown in the left picture

7.09.05 Error code table

Error code	problem description	countermeasure
E01	overvoltage	Turn off the system power supply and check whether the supply supply voltage is correct.(Or whether the specified rated voltage is exceeded).
E02	low voltage	Turn off the system power supply and check whether the supply supply voltage is correct.(Or whether it is below the specified rated voltage when used).
E03	The CPU communication is abnormal	Turn off the system power supply, check whether the connection of the control panel is loose or off, and restart the system after returning it to normal.
E05	Speed controller contact is abnormal	Turn off the system power supply, check whether the speed control connector is loose or detached, and restart the system after returning it to normal.
E07	motor stalling	Turn the head handwheel to check for jamming. If stuck, remove the mechanical fault first. If the rotation is normal, check whether the motor encoder connector and the motor power cord connector are loose. If there is any loosening, please correct it. If the contact is good, check whether the supply supply voltage is abnormal or the speed setting is too high. If so, please adjust.
E08	Manual reverse sewing action time takes over 15 seconds	Back seam electromagnet suction time is too long, restart the product can be. If E-08 after restart the product, check whether the manual reverse switch is damaged.
E10	Electromagnet overcurrent protection	Turn off the system power and check the solenoid (solenoid) for damage or short circuit.
E09 E11	Localization signal anomaly	Turn off the system power supply, check whether the motor encoder interface is loose or detached, and restart the system after restoring it to normal.
E14	Encoder signal is abnormal	Turn off the system power supply, check whether the motor encoder interface is loose or detached, and restart the system after restoring it to normal.
E15	Improper overcurrent protection of the power module	Turn off the system power supply, and then turn it on again.
E17	The nose protection switch is not in the correct position	Turn off the system power supply, check whether the nose is lifted, and whether the ball switch in the control box is displaced or damaged.
E20	Motor start failure (electric angle error)	Turn off the system power supply, check whether the motor encoder interface and the motor power supply interface are loose or detached, and restart the system after restoring it to normal.

Port schematic diagram of 7.09.06

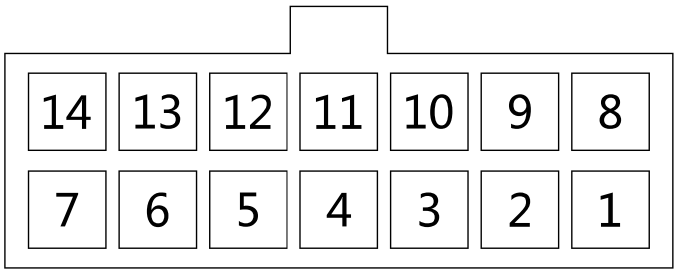

1. Searing electromagnet: 1,8 (+ 32V)
2. Clip line (sweep line) Electromagnet: 2,9 (+ 32V)
3. Pine line electromagnet: 3,10 (+ 32V)
4.LED lamp: 4 (DGND), 11 (+ 5V)
5. Invert button: 5 (signal)
6. Inverted seam electromagnet: 6,13 (+ 32V)
7. Needle button: 7 (signal)

8 Installation and test run

Only qualified personnel are allowed to install and test the machine! Attention must be paid to all the relevant safety regulations here!

If the sewing machine is not supplied with benches, the rack and plates used must be guaranteed to withstand the weight of the machine and motor.

Even in the sewing operation platform also want to ensure sufficient stability.

8.01 Installation

A proper power supply must be ensured at the machine installation site.

According to the different style of the plate, due to the packaging reason, the plate is left down. The abutment height was adjusted as described below.

8.01.01 The height adjustment of the set plate

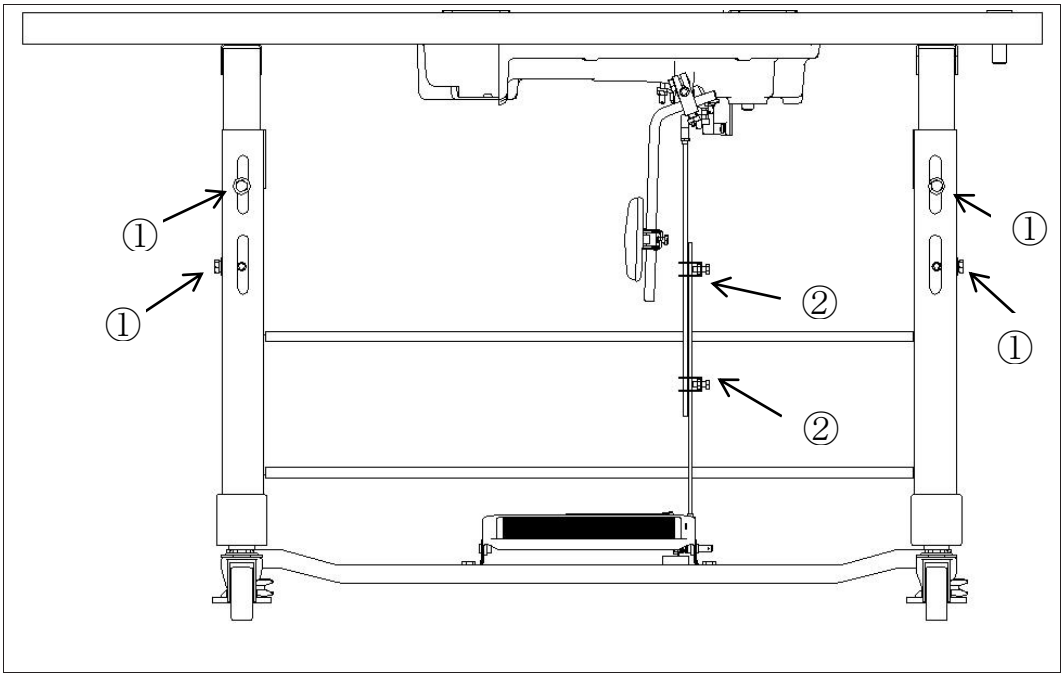

Loosen screw 1 and screw 2 to adjust the abutment plate height as required.
Lock screw 1.
Adjust the foot pedal to a position where you can work comfortably, and then lock the screw 2

8.01.02 Sewing machine installation

8.01.02.01 Installation of oil pan assembly

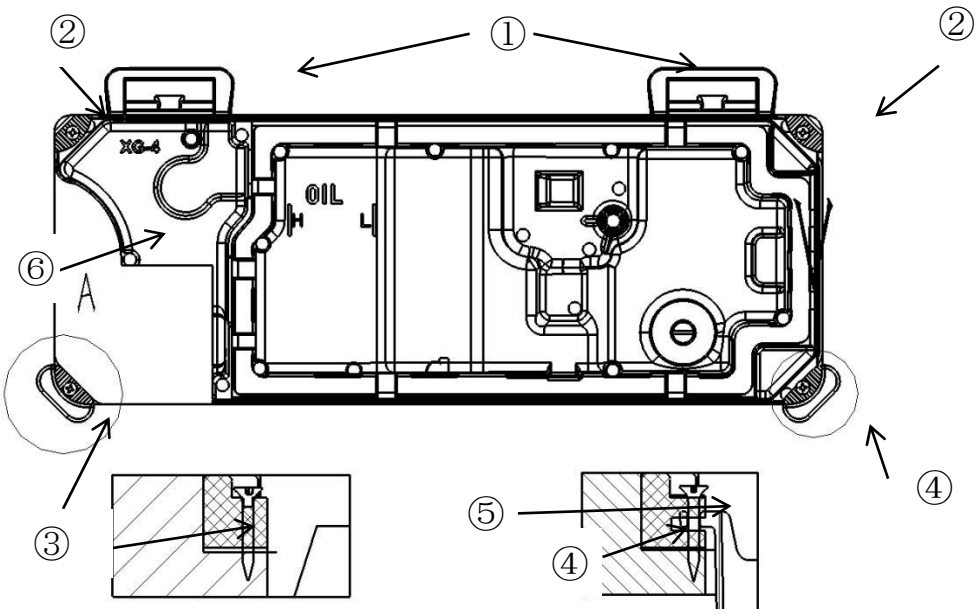

1、Place the oil tank ⑥ on the four corners of the machine table ditch. Install the rubber hinge seat ① to the machine table, and then fix it to the machine table with a nail ⑤.

2、Put the rubber pad ②③④ into the four corners of the oil tank ⑥ in turn, and fix it to the machine table

8.01.02.02 Head installation

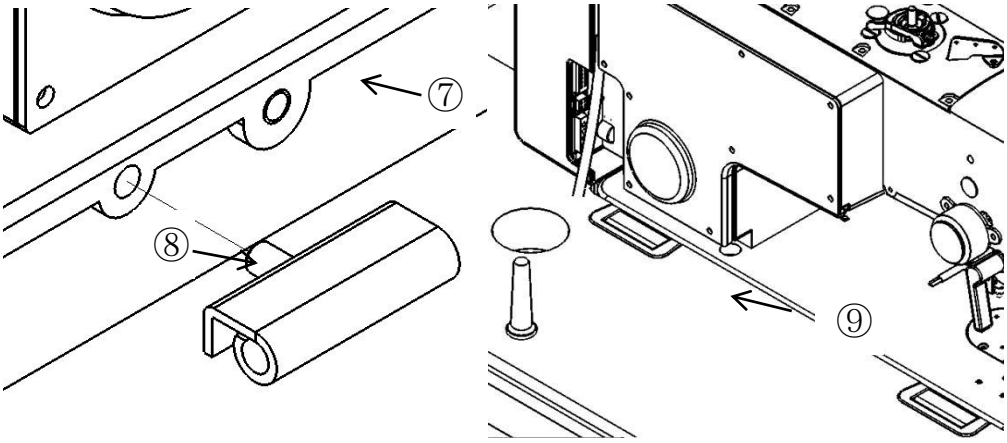

1、Put the hinge ⑧ on the ⑦ hole of the casing, align with the rubber support of the table plate with ①, and fix the sewing machine to the table;

2、Install the nose support rod ⑨ to the console.

8.01.02.03 Installation of random accessories

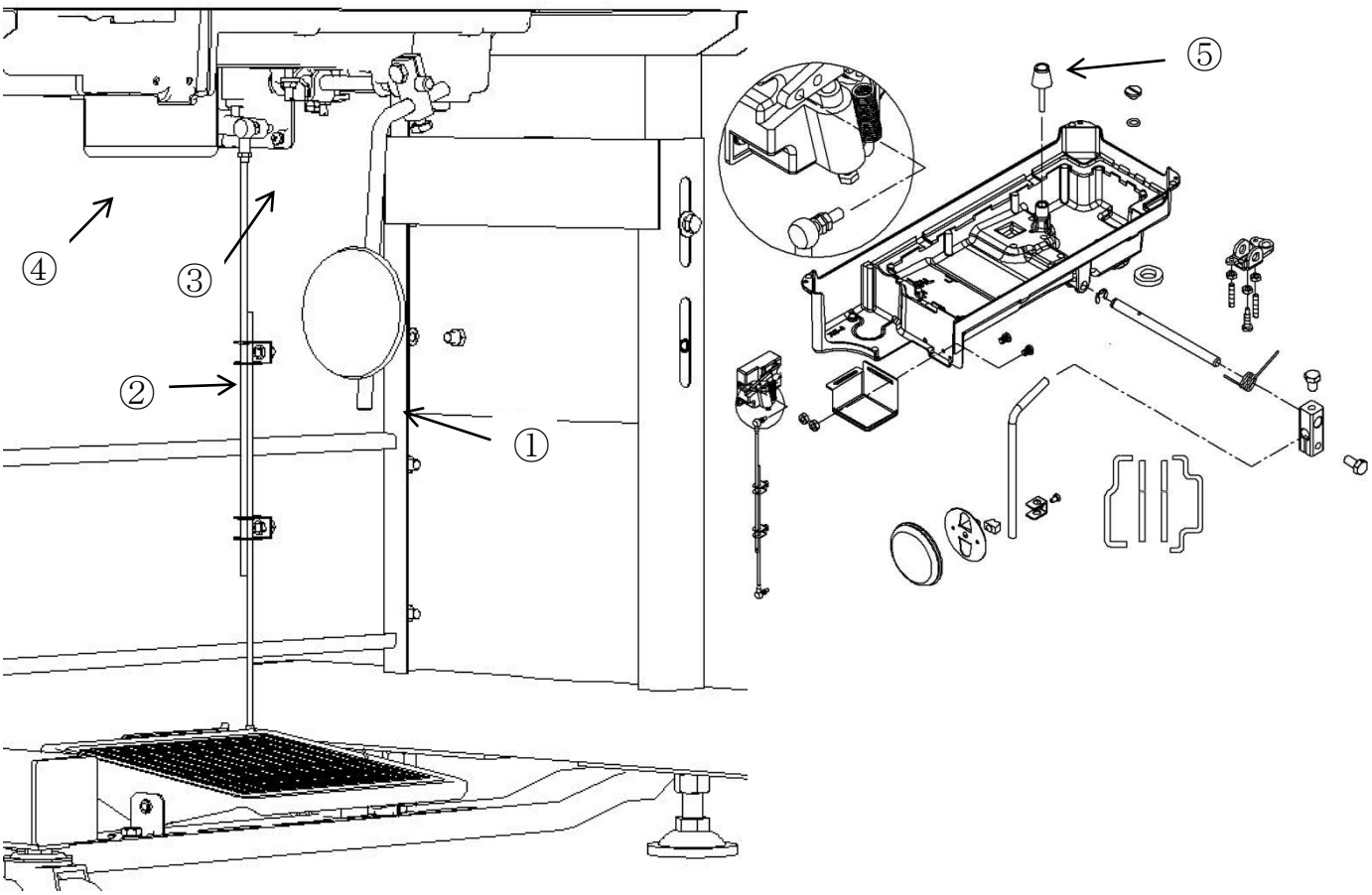

1. As shown in the figure, install the knee assembly ①, pull rod ②, pedal speed controller ③, oil basin ④, and the knee control lifting top bar ⑤.

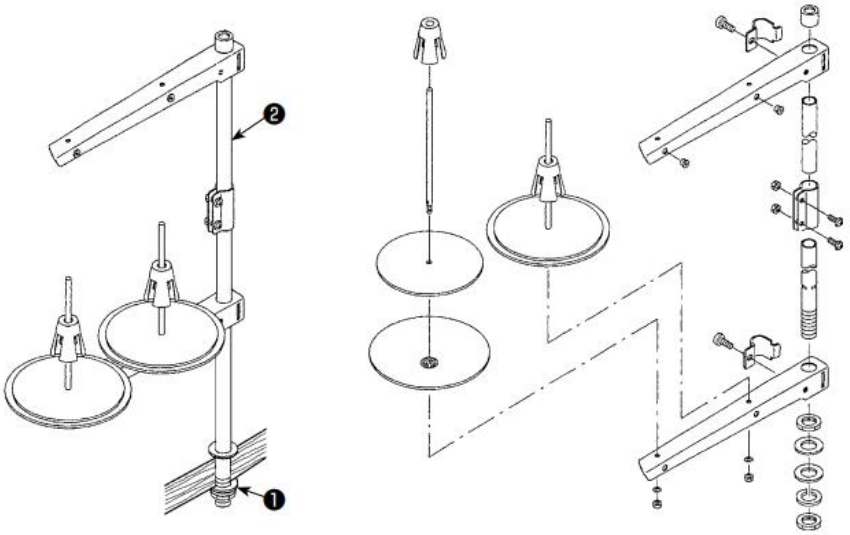

- The wire frame is installed as shown in Fig.
- Then insert the shaft frame into the hole in the plate and secure with the attached nut.

8.02 First test run

- Check the machine, especially the cable, for damage.
- Clean the machine thoroughly and then oil (see Section 12, maintenance and maintenance).
- Check for the motor of the machine to be driven by the existing supply voltage, And the motor should be properly inserted into the junction box. The machine is not allowed to be put into use in case of differences.

8.03 Start / close of the machine

- Start or shutdown of the machine

9 Machine preparation

Note all provisions and tips in this instruction. Special attention should be paid to all of the safety regulations.

All machine preparation is allowed only only for personnel with appropriate training. In all machine preparations, the machine and the power must be separated by the main switch or the power plug.

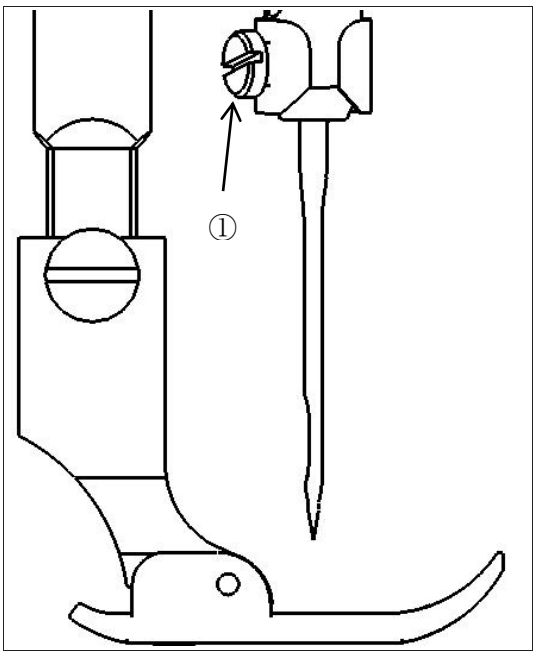

Turn off the machine! Inadvertently cause the

●Release the screw ① and insert the needle to the end with the needle plane facing as shown.

●Tighten the screw ①.

9.02 Through the line and line tension

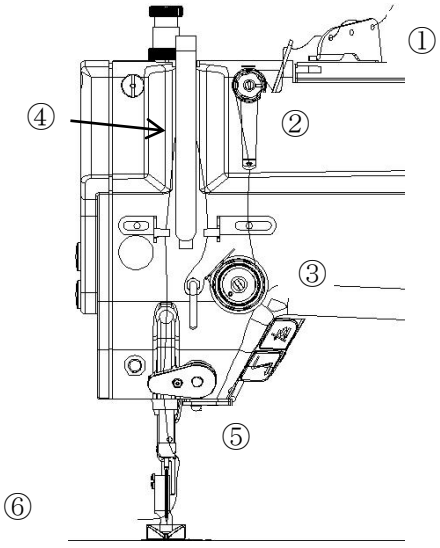

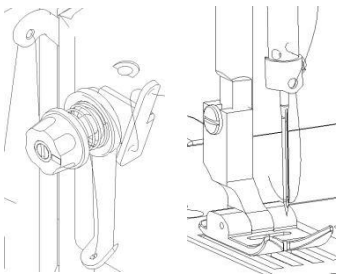

●Line lines in ① - ⑥ order shown in Fig.

●Rotate the small clamp ② can adjust the length of the rear tangent wire head on the needle.

9.03 Around the bottom line; pre-adjust the bottom line tension

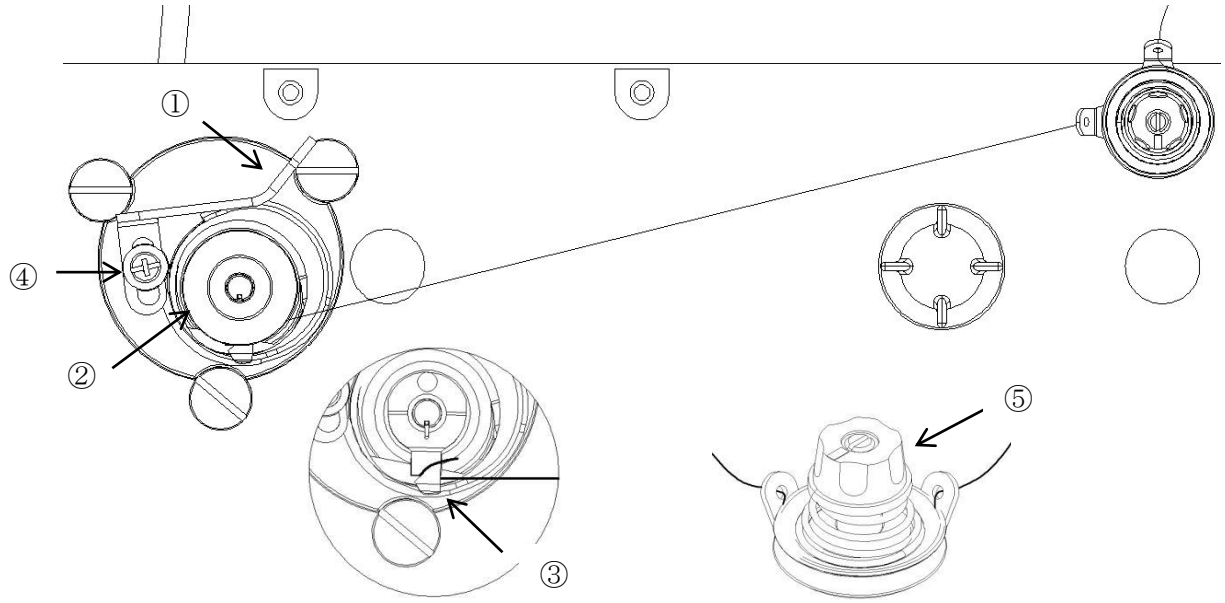

● Cover the empty spindle on the winer shaft.

● Cross the bottom line as shown in the figure and circle the spindle heart ② in a clockwise direction.

● Press the control board ① to start the winding and cut the bottom line through the cutter ③.

● Adjust the amount of spindle core winding through the screw ④.

The shuttle heart is full during the sewing process.

● The thread tension of the shuttle heart can be adjusted by the roller screw ⑤.

● When the spindle winding is full enough, the winding device will automatically stop, and the amount of the spindle winding can be adjusted through the screw ④.

9.04 Remove / load spindle shell

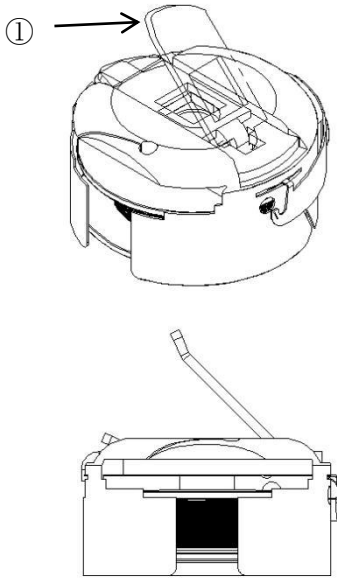

Turn off the machine!

Accidentally causes the machine to start at risk of injury!

Remove / load spindle shell:

●Pull the shuttle shell ① and remove the shuttle shell.

9.05 The tension of the spindle thread / adjusting the bottom line

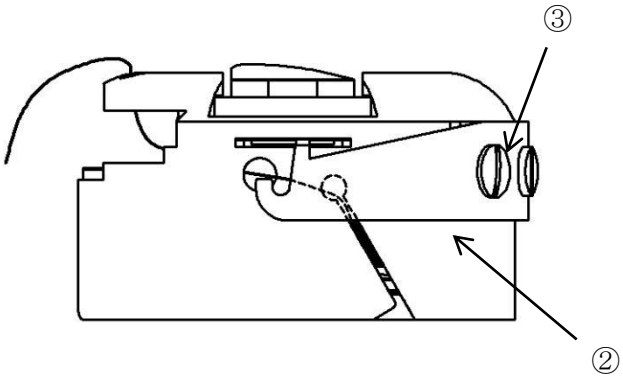

●Place the spindle heart into the spindle shell 1.

●Pass the line through the slot under shrapnel 2. Cross the line through the recess.

●

●Adjust the spindle line tension by turning the screw 3.

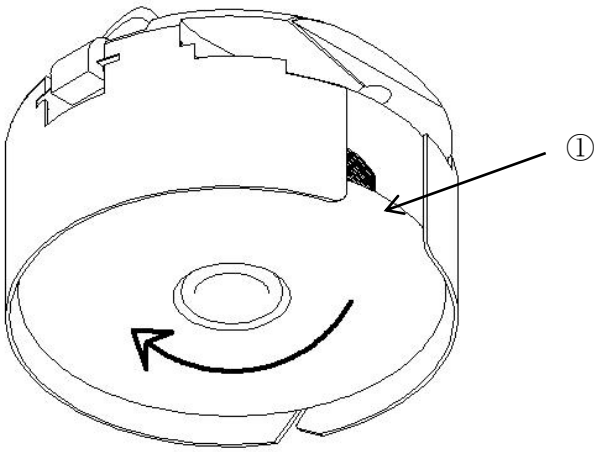

When pulling the thread, the spindle heart must rotate in

the direction of the arrow.

9.06 Pick line spring

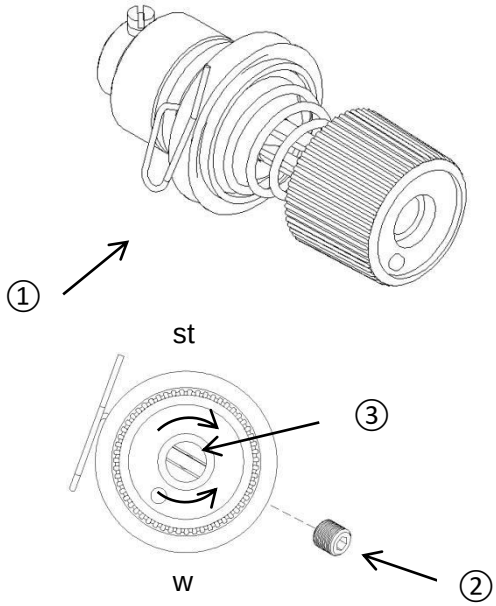

1、Adjust the stroke of the pick spring ①

- Release the fixing screw ②;
- Turn the central axis of the clamp ③ with a screwdriver, and the clockwise rotation pick line stroke becomes larger, and the counterclockwise rotation stroke becomes smaller.

2、Adjust the pressure of the pick spring ①

- Release the clamp fixing screw ② and remove the clamp assembly;
- Loose the clamp center shaft fixing screw ④;
- The central axis of the clamp ③ clockwise

9.07 Machine and spindle adjustment

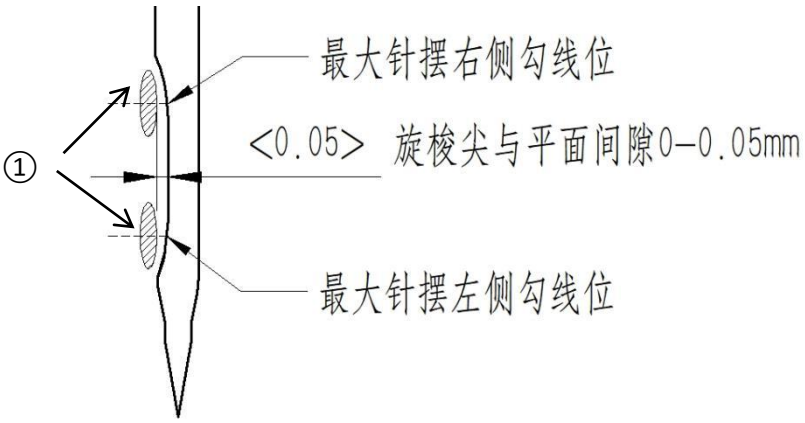

- Adjust the swing amplitude to the maximum, adjust the spindle, so that the left and right side of the machine needle can not touch the spindle tip ①.
- When changing the spindle and different machine needles, please adjust the position of the spindle tip to prevent damage to the spindle tip ①.

9.08 Tangent component adjustment

9.08.01 Tangent the cam position adjustment

- Axial position adjustment of the sheared cam: push the cylindrical gear (Figure 1). When the driving point and the moving blade is 0.5mm apart from the fixed edge, the highest point of the sheared cam fits to the steel ball (Figure 2). Tighten the lock screw and adjust the shaft

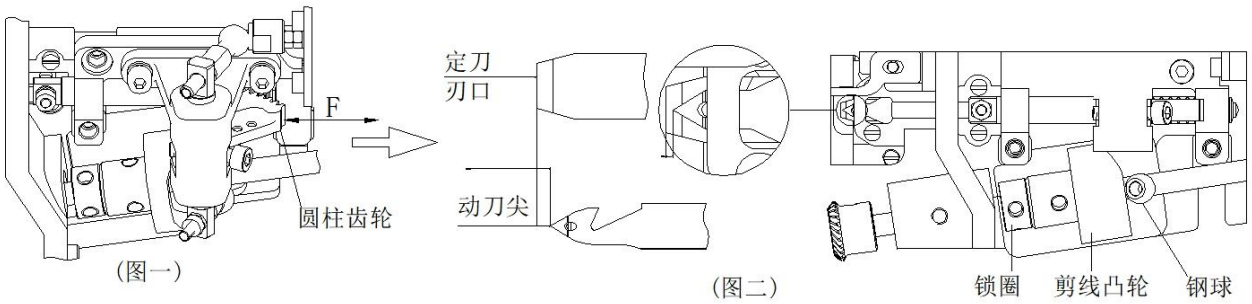

- Axial position adjustment of the sheared cam: push the cylindrical gear (Figure 1). When the driving point and the moving blade is 0.5mm apart from the fixed edge, the highest point of the

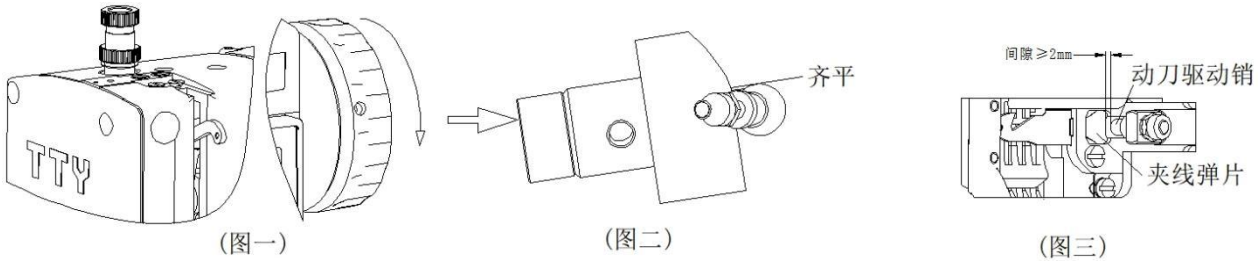

Note: After the position of the shear cam is adjusted, when the blade is in the maximum stroke, check if there is

9.08.02, wire shear electromagnet adjustment

- Move the shear wire shear electromagnet assembly, the steel ball A and the electromagnet fit, when the gap between the steel ball B and the shear cam is about 1mm, lock the adjustment screw.
- When sewing, the position of the electromagnet component can be finely adjusted according to the

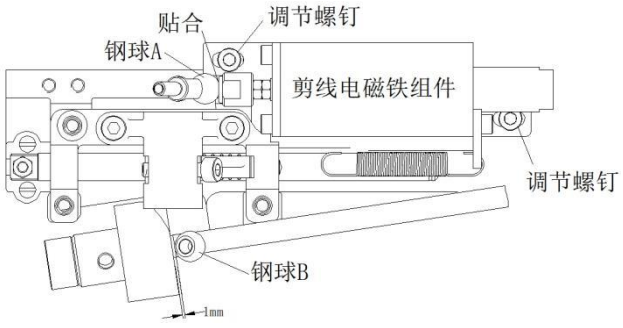

9.08.03, buffer limit block adjustment

- Push the cylindrical gear to the left (Figure 1). When the gap between the ball B and the shear cam is 1.5mm, move the buffer limit block to contact with the ball A and lock the adjusting screw.

Note: The purpose of the buffer limit block is to be a buffer, and must not be used as a cutter

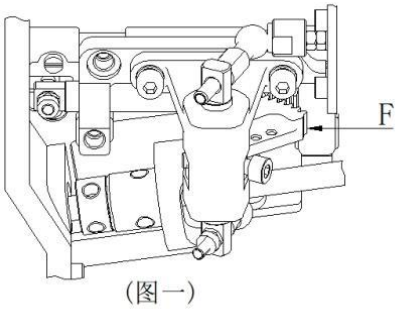

(图一)

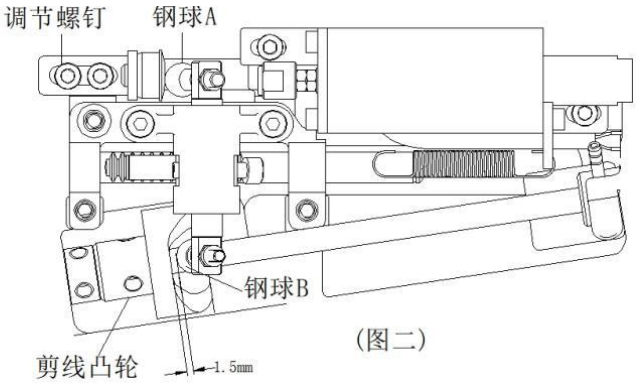

(图二)

10 Maintenance and maintenance

Clean the machine for the	Every day, before the boot-up
Clean the spindle capsule	Every day, if in continuous operation, multiple times a day
Oil volume check	Every day, before the boot-up
Bevel gear lubrication	yearly

The above maintenance interval is set according to the average running time of the machine working in a single shift per day. It is recommended to shorten the maintenance interval when the machine running time increases.

10.01 Cleaning

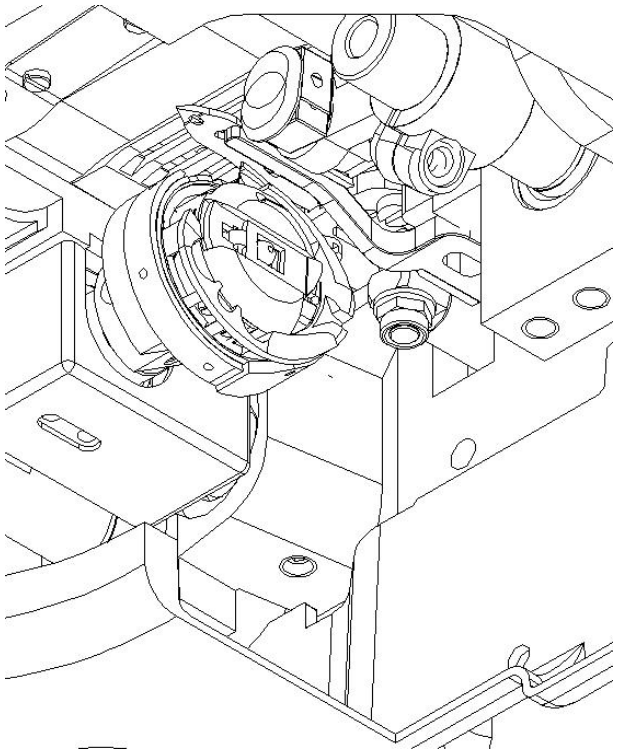

Power off the machine!
Is in danger of being accidentally started by the machine!

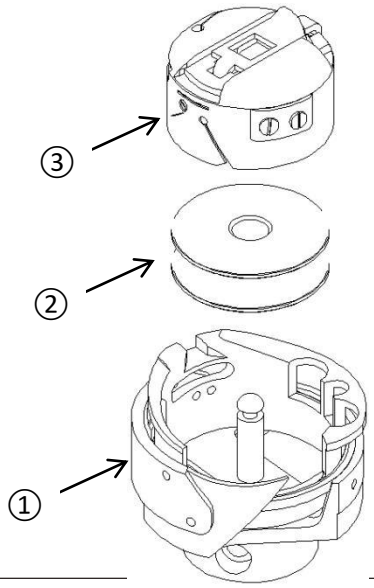

● Raise the needle rod to the highest position.

● Open the machine to take out the spindle shell ③ and ②, clean up the wire thread and cloth of the spindle ①.

● Clean the spindle groove with paraffin, check the wear of the spindle tip and the axial and radial clearance.

10.02 Fuel the rotary shuttle

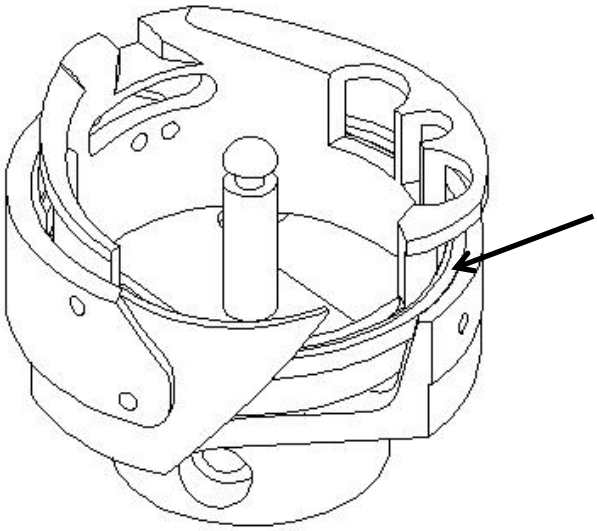

Turn off the machine!
Inadvertently cause the machine to start the

● Before the machine test run and after a long-time shutdown, inject

10.03 Check the oil level

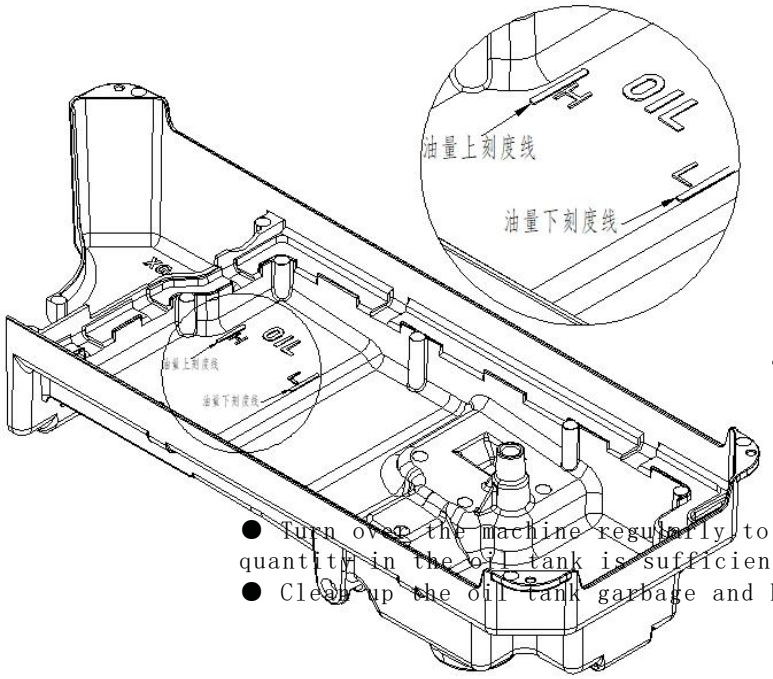

Check the oil level before each boot.
The oil in the tank must always be maintained

● Turn over the machine regularly to check whether the oil quantity in the oil tank is sufficient.
● Clean up the oil tank garbage and keep the sewing oil clean

10.05 Bevel gear gear lubrication

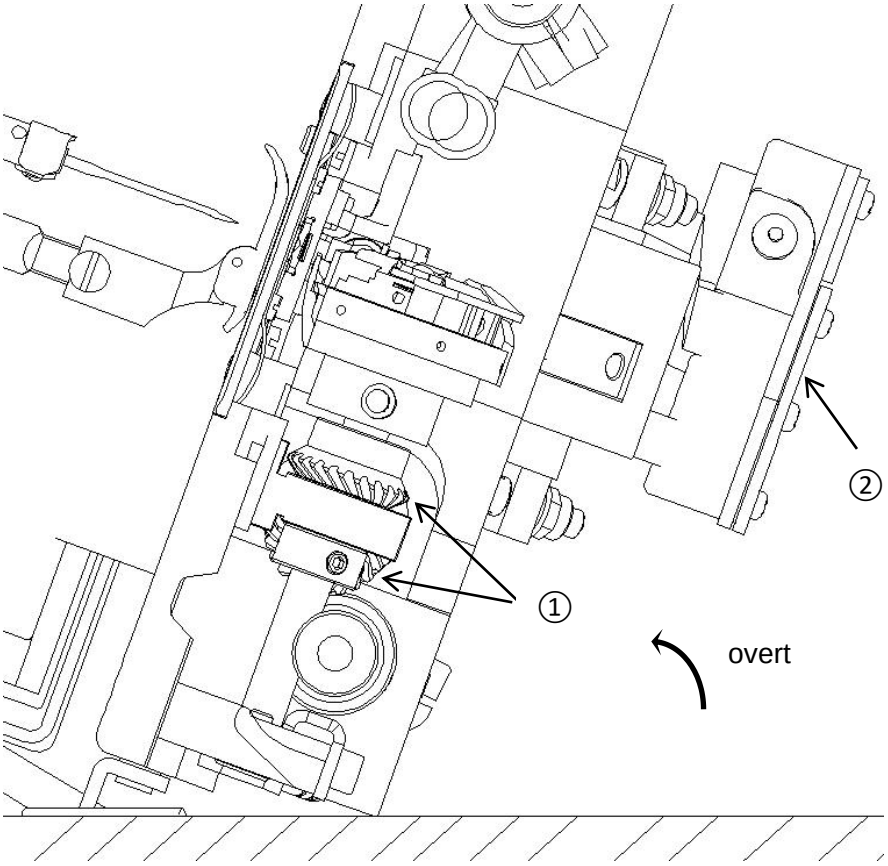

Turn off the machine!
Accidentally cause the machine to start up and there is a danger of injury!

- All bevel gears must be filled with new grease once a year.
- Flip the machine head back to the support parts.

Figure 12-05 shows the bevel gear of 1591.

- Apply the bevel gear ① with grease (see arrow).
- Clean up the ② filter garbage of the oil pump (see arrow).
- When putting the head back to the vertical position, press the flip insurance 1 back first and put the head back with both hands.

The nose must be put back
to the vertical position
with both hands! There is a

danger of being squeezed between the nose and the board!

11 Impaired parts



Machine: 155217001



Set: 221219004

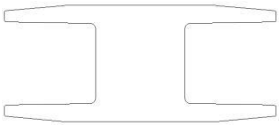

Spindle core: 221231015



Winding O-ring: O01110

Anhui Jieyu Shoe Machinery Technology Co., LTD

Address: Jinan Industrial Park, Economic and Technological Development Zone, Chizhou City, Anhui Province

Tel.: 0566-2417799